Tesla Supercharger Datasheet

The specifications within this document are subject to change by Tesla

Tesla V4 Supercharger Post

Tesla's next generation V4 Supercharger Post is designed to deliver best-in-class performance, user experience, and aesthetics. The V4 Supercharger Post brings Tesla's global leadership in EV charging infrastructure deployment to more use cases by enabling support for global charging standards, including NACS, CCS1, CCS2, and GB/T. The V4 Supercharger Post with universal cable reach delivers a vehicle-agnostic experience allowing all users to charge with confidence.

KEY FEATURES

- Supports global charging standards
- Supports open communication standards
- Universal cable reach
- Unparalleled ergonomics and performance
- No high voltage at post when not in use
- Small footprint saves space in parking areas
- Integrated revenue-grade DC energy meter
- Optional payment/display module
- 1 m flood tolerance
- ADA / EAA compliant user interfaces

V4 Supercharger Post Technical Specifications

Product	Part Number	1732843
	Model Number	CS-615-A2 (NACS + CCS1), CS-615-E2 (CCS2)
	Maximum Power with V3 Cabinet	250kW
	Voltage Range with V3 Cabinet	0-500VDC
	Continuous Current with V3 Cabinet	615A
	Protection	Over Current, Over Temperature
	Compliance	UL 2202, CSA 22.2#107.1, IEC 61851-1, IEC 61851-23
	Protocol Support	ISO 15118-2, DIN70121, OCPP 2.0.1*
Payment Module (optional)	Payment types	Contactless Payments with Debit Card, Credit Card, and Digital Wallets (Apple Pay, Google Pay, etc.), RFID card
	Display Size	3.5 inch touchscreen
	Compliance	EMVCo L2 contactless, EMVCo L3 PCI PTS V6 unattended
Environmental	Operating Temperature	-30°C to 50°C
	Ingress Protection	IP54 NEMA 3R
	Flood Tolerance	1015 mm
	Maximum Noise Level @ 1m	60 dBA below 40°C, 65 dBA above 40°C
Mechanical	Total Weight	90 kg
	Dimensions	334 x 891 x 1946 mm
	Charging Cable Length	3 m
Site Layout and Installation	Input Lug: V+, V- (2/pole)	Cu/Al , 150 mm² – 380 mm² (300MCM – 750MCM)
	PE Lug (2)	Cu/Al, 16 mm² – 95 mm² (6AWG – 250MCM)
	24V Power Input: V+, V- (1/pole)	Cu, 10 mm² (8 AWG)
	Termination Temperature	90°C
	Max Distance From Cabinet	100 m

* See Open Charge Alliance list of certified products

V4 Supercharger Post Technical Specifications

Dimensions

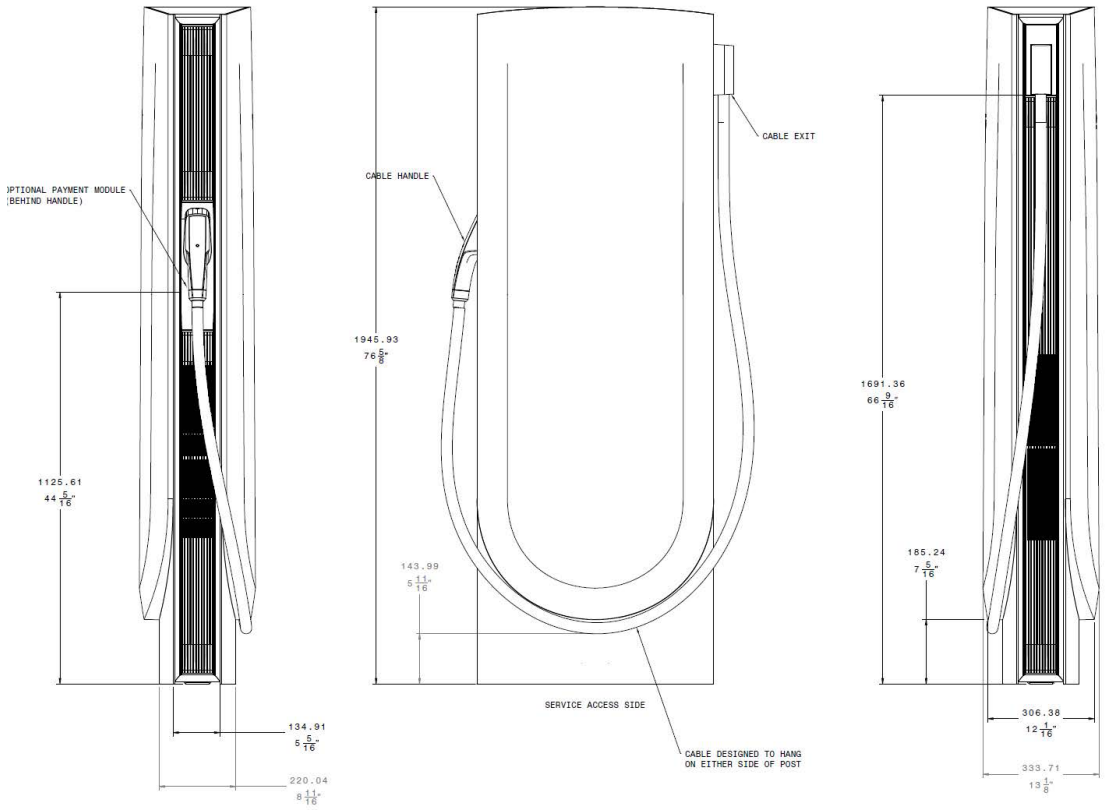

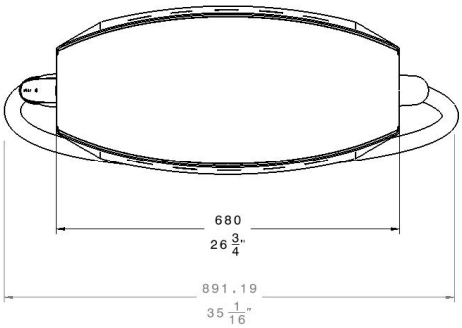

Tesla V3 Supercharger Cabinet

The Tesla V3 Supercharger Cabinet provides AC/DC power conversion as part of the Supercharger system when deployed with the V4 Supercharger Post. The advanced system architecture includes highly optimized state of the art power electronics, efficient conversion, and enables site-wide power sharing for maximum throughput.

Key Features

- Supports NACS, CCS1, CCS2, GB
- High power density/compact footprint
- UL & IEC Compliance
- High efficiency low noise cooling system
- Wide input voltage range
- Rugged enclosure for all environments
- Surface mount wiring options
- High power factor and low harmonics

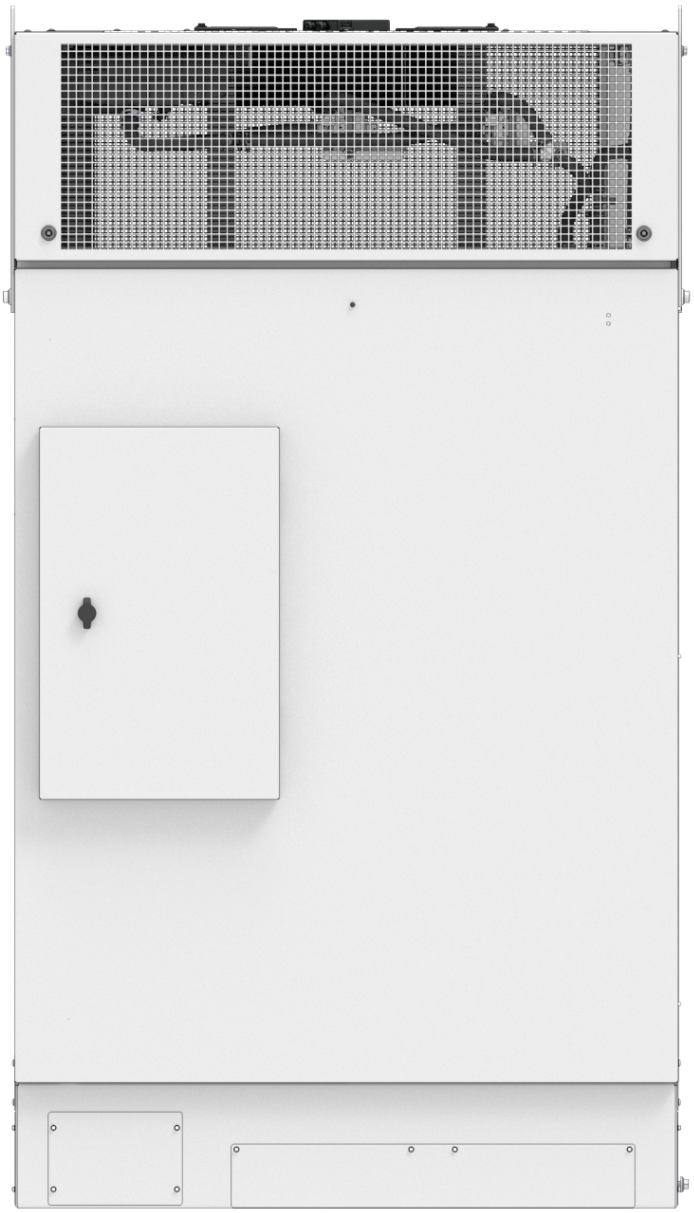

V3 Supercharger Cabinet Technical Specifications

AC Input (Electrical)

	Input (V_{AC})	480	440	415	400	380
Peak AC Input Power	Power (kVA)	387	354	334	322	306
AC Input Voltage	380 V_{AC}-480 V_{AC} (-5%, + 10%), 4-wire 3AC+N					
Ac Input Current	465 A_{AC} Max.					
Frequency	50 Hz /60 Hz					
Power Factor	≥ 0.99					
Current THD	< 3%					
Voltage THD	< 2%					

AC Input (Mechanical)

Conductor Sizes	L1, L2, L3, N: 150 - 400 mm2, 250 - 750 MCM PE: 10 - 70 mm2 , #8 AWG - 2/0	
Conductor Material Type	L1, L2, L3, N: Cu, Al	PE: Cu/Al
Mfr. Termination Temp. Rating	90°C	

Shared DC Bus (Electrical)

Max Rated DC Bus Power	Power (kW)	575
Max Rated DC Bus Current	Current (A_{DC})	640
DC Bus Voltage Range	880 - 1000 V_{DC}	

Shared DC Bus (Mechanical)

Conductor Sizes	V+, V- (2x/pole): 150 - 300 mm^2, 250 - 600 MCM Mid: 16 - 150 mm2, 6AWG - 250 MCM PE: 10 - 70 mm2 , #8 AWG - 2/0	
Conductor Material Type	V+, V-, Mid: Cu, Al	PE: Cu/Al
Conductor Voltage Rating	1000 V	
Mfr. Termination Temp. Rating	90°C	

DC Post Output (Electrical)

Max. Rated Post Power	250 kW
Post Rated Voltage Range	0-500 V_{DC}
Post Rated Current @T_a=35°C	NACS, CCS2 & GB Handle: 615A $_{DC}$
Number of Charge Posts	1-4
Max Voltage Drop	10 V_{DC}

DC Post Output (Mechanical)

Conductor Size	V+, V- (2x/pole):300-600 MCM or 150-300mm^2 PE: #8 AWG - 2/0 or 10-70mm^2 Certified Equipment Wiring: V4 Post: 600MCM or 300mm^2AL	
Conductor Material Type	V+, V-: Al, Cu	PE: Cu/Al
Conductor Voltage Rating	1000 V	
Mfr. Termination Temp Rating	90°C	

V3 Supercharger Cabinet Technical Specifications

System	Efficiency	> 96%
Noise	Typical noise at 1m	35 dB(A)
	Max noise at 1m @30C	60 dB(A)
Environmental	Operating Temperature	-30°C to 50°C, -22°F to 122°F
	Ingress Protection	IP66 (Cabinet), IP2X (Cooling)
	Ventilation Requirements	Ventilation Not Required
Standards	UL 2202, CSA C22.2#107.1, FCC, ICES-003-B, IEC 61851-1, EN 61000-6-2 EN 55011, GB/T 18487.1, GB/T 27930, NB/T 33008.1, NB/T 33001	
Layout	Max. Distance to Charge Post	100 m, 340 ft.
Weight	Supercharger Cabinet Weight	4 Post Cabinet: 1110 kg (2448 lbs)
Dimensions	Depth, Width, Height	1000, 1250, 2200 mm; 39 $_{12/32,}$ 49$_{7/8,}$ 86$_{20/32,}$ in.
Mounting	Per-anchor min. Shear Strength	4 kN
	Per-anchor min. Tension Strength	11 kN
DC Post Output (24V)	24V Post Power Supply Conductors	V+, V- (1x/pole):10 mm2 , #8 AWG CU Integrated in signal cable bundle

V3 Supercharger Cabinet Dimensions

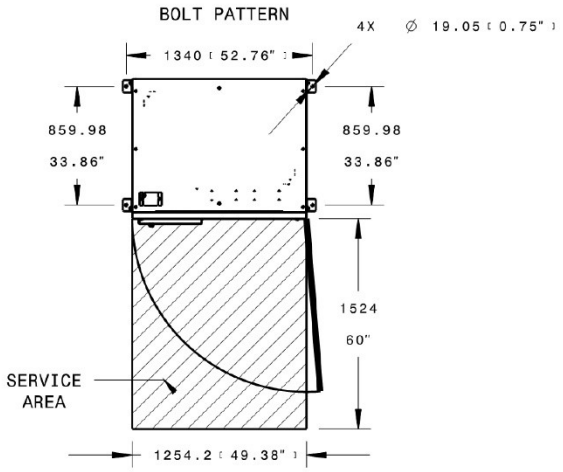

TOP VIEW

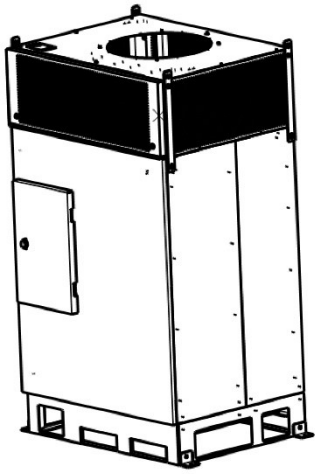

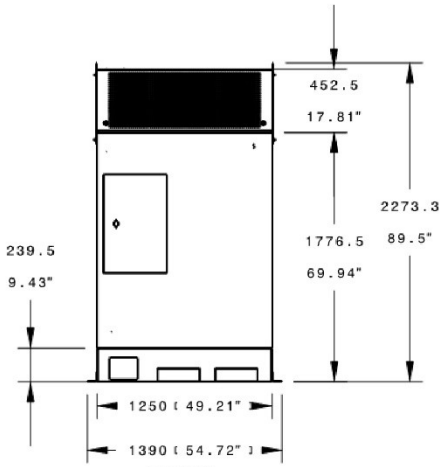

FRONT

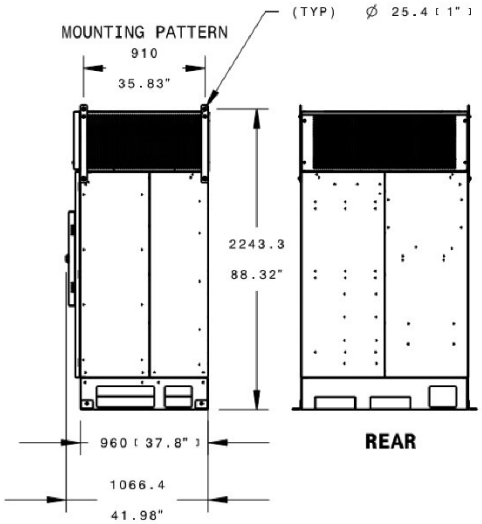

RIGHT

REAR

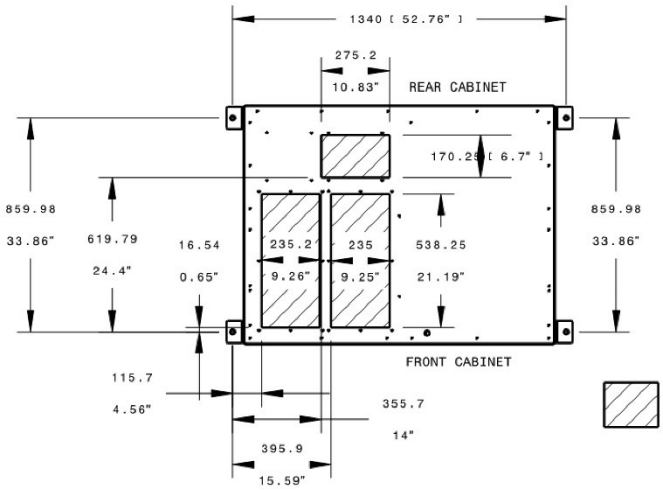

INSIDE CABINET ENLARGED FOR DETAILED VIEW

CABINET OPENING

STANDARD TESLA SYSTEM CONTROLLER ENCLOSURE

The **Standard Tesla System Controller Enclosure** houses the **Standard Tesla System Controller**, overseeing commercial Tesla DC and AC charging systems. The controller connects to Supercharger cabinets and Wall Connectors, collecting data and using algorithms for improved system efficiency. It communicates with power modules through cabinets and/or Wall Connectors, controlling the entire site's energy flow.

The Standard Tesla System Controller:

- Optimizes charging operations hosting advanced algorithms
- Streamlines engagement with external parties, serving as the primary interaction point
- Supports diverse site setups, like power sharing and limiting.
- Expandable enclosure, allowing for a second controller installation

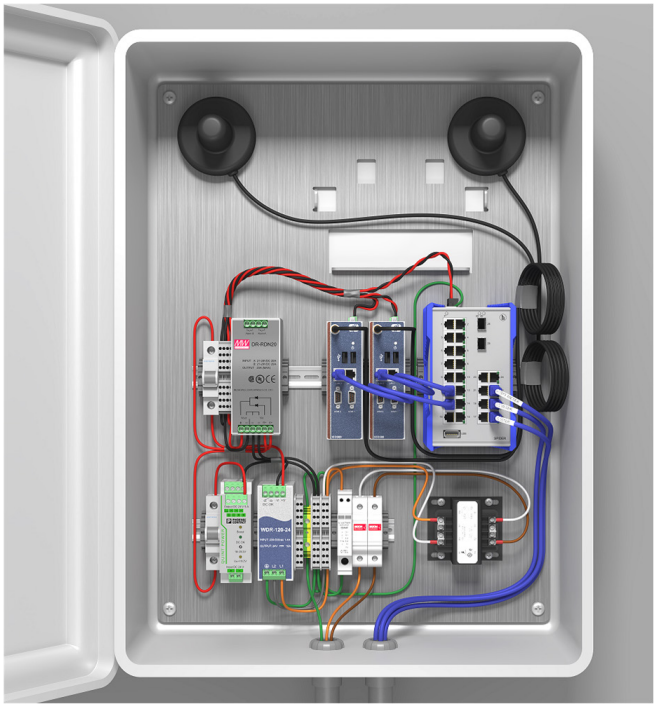

Fully Loaded Standard Tesla System Controller Enclosure

ELECTRICAL

Nominal Input Voltage Range	120–480 VAC
Nominal Frequency	50 or 60 Hz
Operating Power Consumption	100 W maximum
Overvoltage Protection	Category III

MECHANICAL AND MOUNTING

Enclosure	IP67 / NEMA 4
Dimensions	Width: 560 mm (22 in) Depth: 255 mm (10 in) Height: 724 mm (29.2 in)
Weight	22.4 kg (49.4 lbs)
Operating Ambient Temperature	–30°C to 50°C (–22°F to 122°F)
Maximum Altitude	3000 m (9842 ft)
Relative Humidity	100% condensing, wet location rated

COMMUNICATIONS

Protocol	Modbus TCP DNP3 Rest API
Connectivity	Ethernet Cellular

REGULATORY

Safety Certifications	UL 61010-1 CSA-22.2 IEC-61010-1